UBIQUITI™ NETWORKS

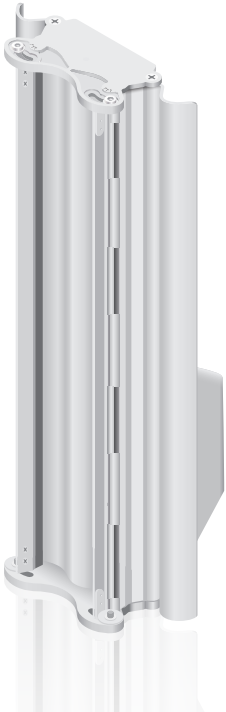

airMAX™
TITANIUM SECTOR

Mid-Gain
Advanced RF Isolation
Variable Beamwidth Antenna

Model: AM-M-V5G-Ti

QUICK START GUIDE

Introduction

Thank you for purchasing the Ubiquiti Networks™ airMAX™ Titanium Sector, model AM-M-V5G-Ti. This Quick Start Guide is designed to walk you through the installation of the antenna.

Package Contents

Antenna

Protective Shroud

Quick Start Guide

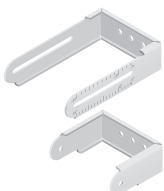

U-Brackets
(Qty. 2)

Pole Brackets
(Qty. 2)

Pole Clamps
(Qty. 2)

M8x135 Carriage Bolts
(Qty. 4)

M8x20 Serrated
Flange Bolts
(Qty. 4)

M8 Serrated
Flange Nuts
(Qty. 8)

RF Cables
(Qty. 2)

* Products may be different from pictures and are subject to change without notice.

Installation Requirements

- Rocket™M5, Rocket M5 GPS, or Rocket M5 Titanium (sold separately)
- 3 mm hex key driver
- 12 mm and 13 mm wrenches
- Shielded Category 5 (or above) cabling should be used for all wired Ethernet connections and should be grounded through the AC ground of the PoE.

  We recommend that you protect your networks from the most brutal environments and devastating ESD attacks with industrial-grade shielded Ethernet cable from Ubiquiti Networks. For more details, visit **www.ubnt.com/toughcable**

Hardware Overview

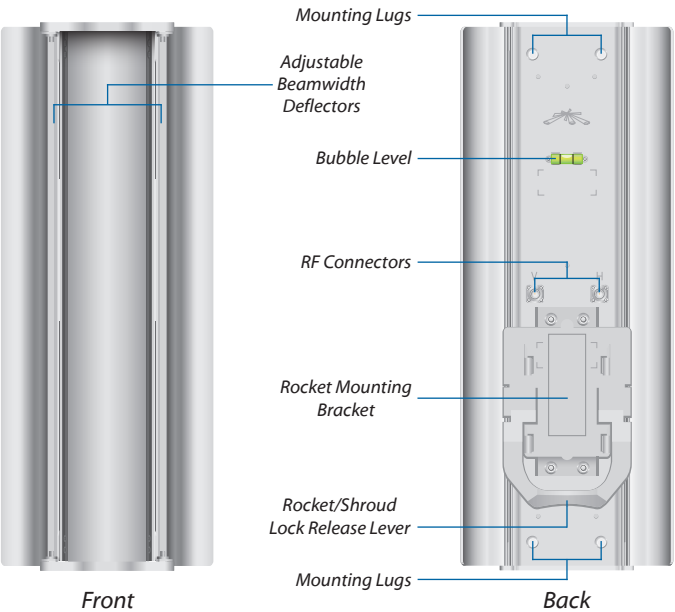

Hardware Installation

1. Set the desired beamwidth by adjusting the *Beamwidth Deflectors*. Use a 3 mm hex key driver to loosen the four hex head screws enough to move the *Beamwidth Deflectors*, but do not remove the screws.

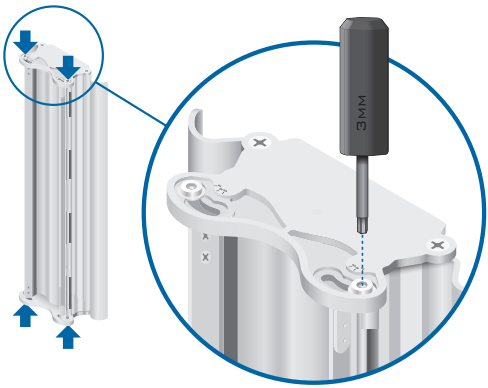

2. Carefully move the *Beamwidth Deflectors* to the desired angle, as indicated by the screw slots.

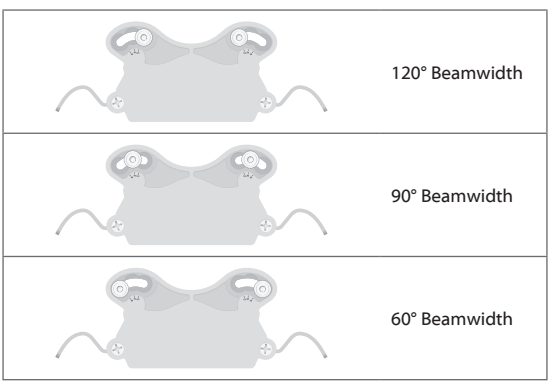

Important: Both deflectors must be set to the same angle.

3. Tighten the four hex head screws.

4. Attach the *U-Brackets* to the antenna:
   a. Secure the slotted *U-Bracket* to the upper *Mounting Lugs* of the antenna using two *M8 Serrated Flange Nuts.*
   b. Secure the other *U-Bracket* to the lower *Mounting Lugs* of the antenna using two *M8 Serrated Flange Nuts.*

Note: Orient both *U-Brackets* as shown below.

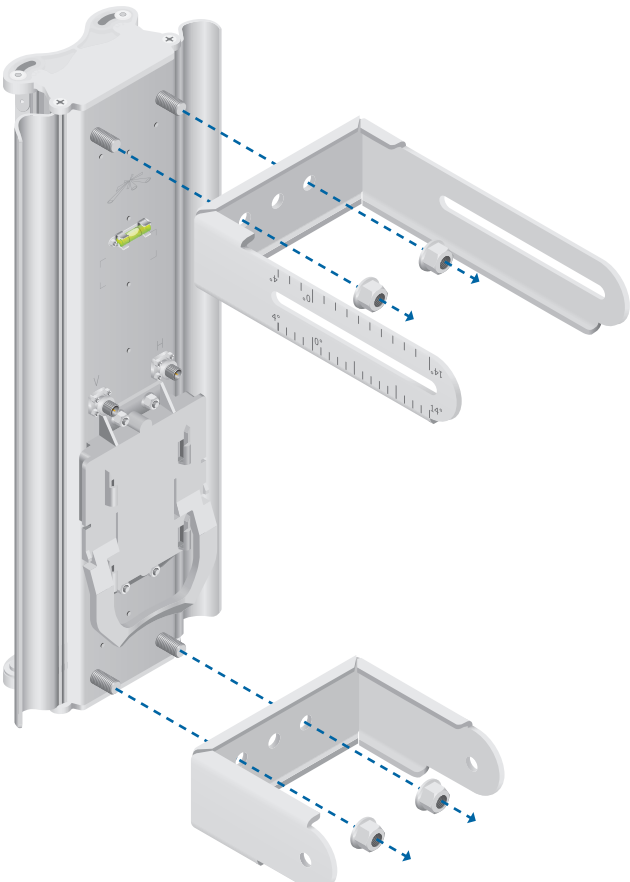

5. Attach the *RF Cables* to the connectors labeled **Chain 0** and **Chain 1** on the RocketM.

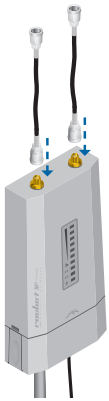

6. Attach the RocketM to the *Rocket Mounting Bracket*.
   a. Align the mounting tabs on the back of the RocketM with the four mounting slots on the bracket.
   b. Slide the RocketM down until it locks into place.

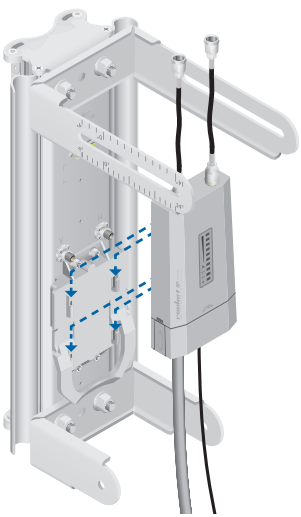

7. Connect the other ends of the *RF Cables* to the *RF Connectors* on the antenna.

8. Slide the *Protective Shroud* down over the RocketM until it locks onto the *Rocket Mounting Bracket*.

Note: If you have trouble locking the shroud into place, try adjusting the placement of the *RF Cables*.

9. Insert two *M8x135 Carriage Bolts* into each *Pole Bracket*.

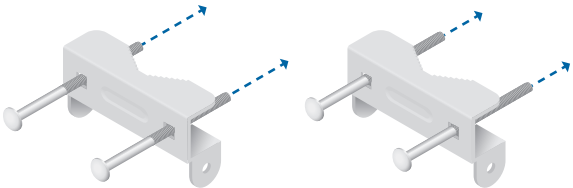

10. Attach each *Pole Bracket* to each *U-Bracket* using two *M8x20 Serrated Flange Bolts*. Hand-tighten only.

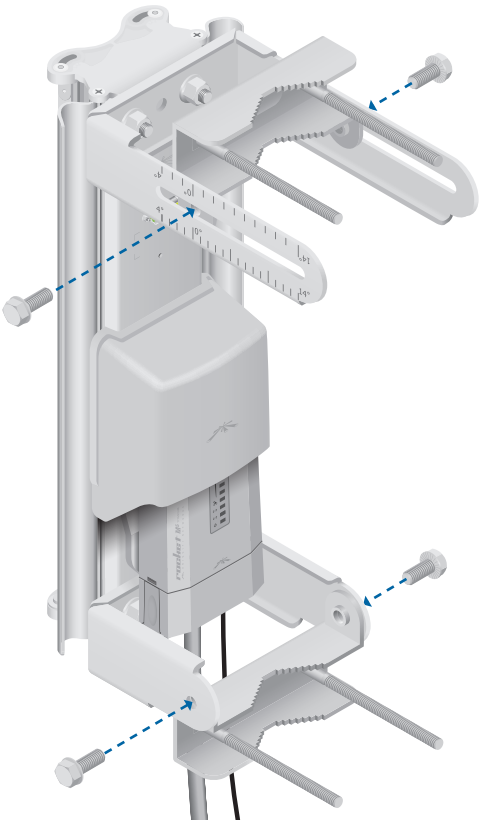

11. To mount the antenna to the pole, slide a *Pole Clamp* over each pair of *M8x135 Carriage Bolts*. Secure each *Pole Clamp* with two *M8 Serrated Flange Nuts*.

Note: The mounting assembly can accommodate a Ø 1.5" - 3.0" pole.

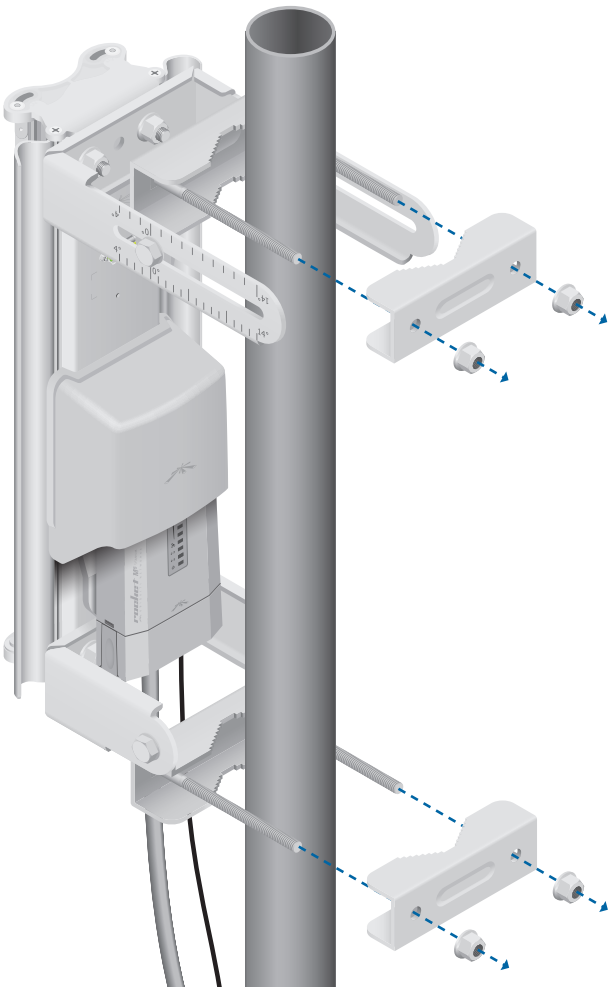

12. The antenna has an electrical downtilt of 3°. To further adjust the elevation angle, loosen the four *M8x20 Serrated Flange Bolts* on the *U-Brackets* and the two *M8 Serrated Flange Nuts* on the upper *Pole Clamp*. Slide the antenna to the desired tilt. (The brackets may slide along the pole, depending on the angle of the elevation tilt.) Tighten all bolts and nuts to approximately 14 N-m (10 lb-ft) or less to avoid deforming the pole.

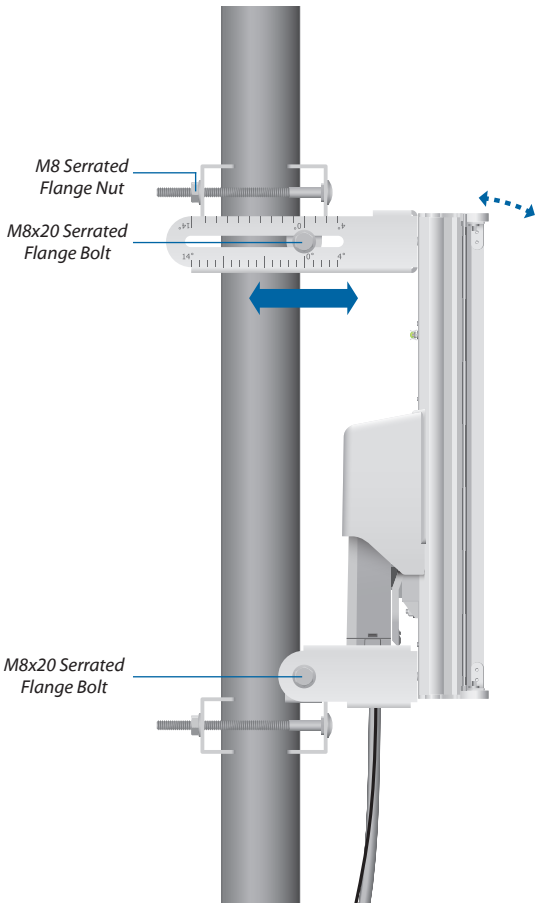

Specifications

AM-M-V5G-Ti	
Dimensions	385 x 149 x 76 mm
Weight	3.25 kg (with Brackets)
Frequency Range	5.45 - 5.85 GHz
Beamwidth Angles	60°/ 90°/ 120°
Gain (Beamwidth Dependent)	17 dBi @ 60° 16 dBi @ 90° 15 dBi @ 120°
Electrical Downtilt	3°
Wind Survivability	125 mph
Wind Loading	15 lbf @ 100 mph
Polarization	Dual Linear
Cross-Pol Isolation	25 dB Typical
F/B Ratio	35 dB Typical
Max. VSWR	1.7:1
RF Connectors	2 RP-SMA Connectors (Weatherproof)
Compatible Radios	RocketM5 Titanium RocketM5 RocketM5 GPS
Mounting	Pole Mount (Kit Included)
ETSI Specification	EN 302 326 DN2
Certifications	CE, FCC, IC

Safety Notices

1. Read, follow, and keep these instructions.
2. Heed all warnings.
3. Only use attachments/accessories specified by the manufacturer.

WARNING: Do not use this product in location that can be submerged by water.

WARNING: Avoid using this product during an electrical storm. There may be a remote risk of electric shock from lightning.

Electrical Safety Information

1. Compliance is required with respect to voltage, frequency, and current requirements indicated on the manufacturer's label. Connection to a different power source than those specified may result in improper operation, damage to the equipment or pose a fire hazard if the limitations are not followed.
2. There are no operator serviceable parts inside this equipment. Service should be provided only by a qualified service technician.

General Warranty

UBIQUITI NETWORKS, Inc ("UBIQUITI NETWORKS") represents and warrants that the Products furnished hereunder shall be free from defects in material and workmanship for a period of one (1) year from the date of shipment by UBIQUITI NETWORKS under normal use and operation. UBIQUITI NETWORKS sole and exclusive obligation under the foregoing warranty shall be to repair or replace, at its option, any defective Product that fails during the warranty period. The expense of removal and reinstallation of any item is not included in this warranty.

The foregoing warranty is exclusive and in lieu of all other warranties, express or implied, including the implied warranties of merchantability and fitness for a particular purpose and any warranties arising from a course of dealing, usage or trade practice with respect to the products. Repair or replacement in the manner provided herein shall be the sole and exclusive remedy of Buyer for breach of warranty and shall constitute fulfillment of all liabilities of UBIQUITI NETWORKS with respect to the quality and performance of the Products. UBIQUITI NETWORKS reserves the right to inspect all defective Products (which must be returned by Buyer to UBIQUITI NETWORKS factory freight prepaid).

No Products will be accepted for replacement or repair without obtaining a Return Materials Authorization (RMA) number from UBIQUITI NETWORKS. Products returned without an RMA number will not be processed and will be returned to Buyer freight collect. UBIQUITI NETWORKS shall have no obligation to make repairs or replacement necessitated by catastrophe, fault, negligence, misuse, abuse, or accident by Buyer, Buyer's customers or any other parties. The warranty period of any repaired or replaced Product shall not extend beyond its original term.

EXCEPT FOR ANY EXPRESS WARRANTIES PROVIDED HEREIN, UBIQUITI NETWORKS' PRODUCTS AND SERVICES ARE PROVIDED "AS IS", WITHOUT WARRANTY OR CONDITION OF ANY KIND, EITHER EXPRESS OR IMPLIED. UBIQUITI NETWORKS, ITS AFFILIATES, AND ITS AND THEIR THIRD PARTY DATA, SERVICE, SOFTWARE AND HARDWARE PROVIDERS HEREBY DISCLAIM AND MAKE NO OTHER REPRESENTATION OR WARRANTY OF ANY KIND, EXPRESS, IMPLIED OR STATUTORY, INCLUDING BUT NOT LIMITED TO REPRESENTATIONS, GUARANTEES, OR WARRANTIES OF MERCHANTABILITY, ACCURACY, QUALITY OF SERVICE OR RESULTS, AVAILABILITY, SATISFACTORY QUALITY, LACK OF VIRUSES, TITLE, QUIET ENJOYMENT, FITNESS FOR A PARTICULAR PURPOSE AND NON-INFRINGEMENT. BUYER ACKNOWLEDGE THAT NEITHER UBIQUITI NETWORKS NOR ITS THIRD PARTY PROVIDERS CONTROLS BUYER'S EQUIPMENT OR THE TRANSFER OF DATA OVER COMMUNICATIONS FACILITIES, INCLUDING THE INTERNET, AND THAT THE PRODUCTS AND SERVICES MAY BE SUBJECT TO LIMITATIONS, INTERRUPTIONS, DELAYS, CANCELLATIONS AND OTHER PROBLEMS INHERENT IN THE USE OF THE COMMUNICATIONS FACILITIES. UBIQUITI NETWORKS, ITS AFFILIATES AND ITS AND THEIR THIRD PARTY PROVIDERS ARE NOT RESPONSIBLE FOR ANY INTERRUPTIONS, DELAYS, CANCELLATIONS, DELIVERY FAILURES, DATA LOSS, CONTENT CORRUPTION, PACKET LOSS, OR OTHER DAMAGE RESULTING FROM THESE PROBLEMS.

Warranty Conditions

The foregoing warranty shall apply only if:

(I) The Product has not been subjected to misuse, neglect or unusual physical, electrical or electromagnetic stress, or some other type of accident.

(II) No modification, alteration or addition has been made to the Product by persons other than UBIQUITI NETWORKS or UBIQUITI NETWORK'S authorized representatives or otherwise approved by UBIQUITI NETWORKS.

(III) The Product has been properly installed and used at all times in accordance, and in all material respects, with the applicable Product documentation.

(IV) All Ethernet cabling runs use CAT5 (or above) shielded cabling.

Disclaimer: UBIQUITI NETWORKS does not warrant that the operation of the products is error-free or that operation will be uninterrupted. In no event shall UBIQUITI NETWORKS be responsible for damages or claims of any nature or description relating to system performance, including coverage, buyer's selection of products for buyer's application and/or failure of products to meet government or regulatory requirements.

Returns

In the unlikely event a defect occurs, please work through the dealer or distributor from which this product was purchased.

Compliance

RF Exposure Warning

The antenna and transmitter must be installed to provide a separation distance from all persons and must not be located or operating in conjunction with any other antenna or transmitter. For the specific separation distance, refer to the Quick Start Guide for your RocketM device (transmitter).

L'antenne et l'émetteur doit être installé pour fournir une distance de séparation de toute les personnes et ne doit pas être situé ou opérant en conjonction avec une autre antenne ou un autre émetteur. Pour la distance spécifique de séparation, se référer au Guide de démarrage rapide pour votre appareil RocketM (l'émetteur).

RoHS/WEEE Compliance Statement

English

European Directive 2002/96/EC requires that the equipment bearing this symbol on the product and/or its packaging must not be disposed of with unsorted municipal waste. The symbol indicates that this product should be disposed of separately from regular household waste streams. It is your responsibility to dispose of this and other electric and electronic equipment via designated collection facilities appointed by the government or local authorities. Correct disposal and recycling will help prevent potential negative consequences to the environment and human health. For more detailed information about the disposal of your old equipment, please contact your local authorities, waste disposal service, or the shop where you purchased the product.

Deutsch

Die Europäische Richtlinie 2002/96/EC verlangt, dass technische Ausrüstung, die direkt am Gerät und/oder an der Verpackung mit diesem Symbol versehen ist , nicht zusammen mit unsortiertem Gemeindeabfall entsorgt werden darf. Das Symbol weist darauf hin, dass das Produkt von regulärem Haushaltmüll getrennt entsorgt werden sollte. Es liegt in Ihrer Verantwortung, dieses Gerät und andere elektrische und elektronische Geräte über die dafür zuständigen und von der Regierung oder örtlichen Behörden dazu bestimmten Sammelstellen zu entsorgen. Ordnungsgemäßes Entsorgen und Recyceln trägt dazu bei, potentielle negative Folgen für Umwelt und die menschliche Gesundheit zu vermeiden. Wenn Sie weitere Informationen zur Entsorgung Ihrer Altgeräte benötigen, wenden Sie sich bitte an die örtlichen Behörden oder städtischen Entsorgungsdienste oder an den Händler, bei dem Sie das Produkt erworben haben.

Español

La Directiva 2002/96/CE de la UE exige que los equipos que lleven este símbolo en el propio aparato y/o en su embalaje no deben eliminarse junto con otros residuos urbanos no seleccionados. El símbolo indica que el producto en cuestión debe separarse de los residuos domésticos convencionales con vistas a su eliminación. Es responsabilidad suya desechar este y cualesquiera otros aparatos eléctricos y electrónicos a través de los puntos de recogida que ponen a su disposición el gobierno y las autoridades locales. Al desechar y reciclar correctamente estos aparatos estará contribuyendo a evitar posibles consecuencias negativas para el medio ambiente y la salud de las personas. Si desea obtener información más detallada sobre la eliminación segura de su aparato usado, consulte a las autoridades locales, al servicio de recogida y eliminación de residuos de su zona o pregunte en la tienda donde adquirió el producto.

Français

La directive européenne 2002/96/CE exige que l'équipement sur lequel est apposé ce symbole sur le produit et/ou son emballage ne soit pas jeté avec les autres ordures ménagères. Ce symbole indique que le produit doit être éliminé dans un circuit distinct de celui pour les déchets des ménages. Il est de votre responsabilité de jeter ce matériel ainsi que tout autre matériel électrique ou électronique par les moyens de collecte indiqués par le gouvernement et les pouvoirs publics des collectivités territoriales. L'élimination et le recyclage en bonne et due forme ont pour but de lutter contre l'impact néfaste potentiel de ce type de produits sur l'environnement et la santé publique. Pour plus d'informations sur le mode d'élimination de votre ancien équipement, veuillez prendre contact avec les pouvoirs publics locaux, le service de traitement des déchets, ou l'endroit où vous avez acheté le produit.

Italiano

La direttiva europea 2002/96/EC richiede che le apparecchiature contrassegnate con questo simbolo sul prodotto e/o sull'imballaggio non siano smaltite insieme ai rifiuti urbani non differenziati. Il simbolo indica che questo prodotto non deve essere smaltito insieme ai normali rifiuti domestici. È responsabilità del proprietario smaltire sia questi prodotti sia le altre apparecchiature elettriche ed elettroniche mediante le specifiche strutture di raccolta indicate dal governo o dagli enti pubblici locali. Il corretto smaltimento ed il riciclaggio aiuteranno a prevenire conseguenze potenzialmente negative per l'ambiente e per la salute dell'essere umano. Per ricevere informazioni più dettagliate circa lo smaltimento delle vecchie apparecchiature in Vostro possesso, Vi invitiamo a contattare gli enti pubblici di competenza, il servizio di smaltimento rifiuti o il negozio nel quale avete acquistato il prodotto.

Declaration of Conformity

Česky [Czech]	UBIQUITI NETWORKS tímto prohla uje, e tento UBIQUITI NETWORKS device, je ve shod se základními po adavky a dal ími p íslu n mi ustanoveními sm rnice 1999/5/ES.
Dansk [Danish]	Undertegnede UBIQUITI NETWORKS erklærer herved, at følgende udstyr UBIQUITI NETWORKS device, overholder de væsentlige krav og øvrige relevante krav i direktiv 1999/5/EF.
Nederlands [Dutch]	Hierbij verklaart UBIQUITI NETWORKS dat het toestel UBIQUITI NETWORKS device, in overeenstemming is met de essentiële eisen en de andere relevante bepalingen van richtlijn 1999/5/EG. Bij deze verklaart UBIQUITI NETWORKS dat deze UBIQUITI NETWORKS device, voldoet aan de essentiële eisen en aan de overige relevante bepalingen van Richtlijn 1999/5/EC.
English	Hereby, UBIQUITI NETWORKS, declares that this UBIQUITI NETWORKS device, is in compliance with the essential requirements and other relevant provisions of Directive 1999/5/EC.
Eesti [Estonian]	Käesolevaga kinnitab UBIQUITI NETWORKS seadme UBIQUITI NETWORKS device, vastavust direktiivi 1999/5/EÜ põhinõuetele ja nimetatud direktiivist tulenevatele teistele asjakohastele sätetele.
Suomi [Finnish]	UBIQUITI NETWORKS vakuuttaa täten että UBIQUITI NETWORKS device, tyyppinen laite on direktiivin 1999/5/EY oleellisten vaatimusten ja sitä koskevien direktiivin muiden ehtojen mukainen.
Français [French]	Par la présente UBIQUITI NETWORKS déclare que l'appareil UBIQUITI NETWORKS, device est conforme aux exigences essentielles et aux autres dispositions pertinentes de la directive 1999/5/CE.
Deutsch [German]	Hiermit erklärt UBIQUITI NETWORKS, dass sich diese UBIQUITI NETWORKS device, in Übereinstimmung mit den grundlegenden Anforderungen und den anderen relevanten Vorschriften der Richtlinie 1999/5/EG befindet". (BMWi)
Ελληνική [Greek]	ΜΕ ΤΗΝ ΠΑΡΟΥΣΑ UBIQUITI NETWORKS ΔΗΛΩΝΕΙ ΟΤΙ UBIQUITI NETWORKS device, ΣΥΜΜΟΡΦΩΝΕΤΑΙ ΠΡΟΣ ΤΙΣ ΟΥΣΙΩΔΕΙΣ ΑΠΑΙΤΗΣΕΙΣ ΚΑΙ ΤΙΣ ΛΟΙΠΕΣ ΣΧΕΤΙΚΕΣ ΔΙΑΤΑΞΕΙΣ ΤΗΣ ΟΔΗΓΙΑΣ 1995/5/ΕΚ.
Magyar [Hungarian]	Alulírott, UBIQUITI NETWORKS nyilatkozom, hogy a UBIQUITI NETWORKS device, megfelel a vonatkozó alapvetö követelményeknek és az 1999/5/EC irányelv egyéb elöírásainak.
Íslenska [Icelandic]	Hér me l sir UBIQUITI NETWORKS yfir ví a UBIQUITI NETWORKS device, er í samræmi vi grunnkröfur og a rar kröfur, sem ger ar eru í tilskipun 1999/5/EC.
Italiano [Italian]	Con la presente UBIQUITI NETWORKS dichiara che questo UBIQUITI NETWORKS device, è conforme ai requisiti essenziali ed alle altre disposizioni pertinenti stabilite dalla direttiva 1999/5/CE.

Latviski [Latvian]	Ar o UBIQUITI NETWORKS deklar , ka UBIQUITI NETWORKS device, atbilst Direkt vas 1999/5/EK b tiskaj m pras b m un citiem ar to saist tajiem noteikumiem.
Lietuviškai [Lithuanian]	UBIQUITI NETWORKS deklaruoja, kad šis UBIQUITI NETWORKS įrenginys atitinka esminius reikalavimus ir kitas 1999/5/EB Direktyvos nuostatas.
Malti [Maltese]	Hawnhekk, UBIQUITI NETWORKS, jiddikjara li dan UBIQUITI NETWORKS device, jikkonforma mal- ti ijiet essenzjali u ma provvedimenti o rajn relevanti li hemm fid-Dirrettiva 1999/5/EC.
Norsk [Norwegian]	UBIQUITI NETWORKS erklærer herved at utstyret UBIQUITI NETWORKS device, er i samsvar med de grunnleggende krav og øvrige relevante krav i direktiv 1999/5/EF.
Slovensky [Slovak]	UBIQUITI NETWORKS t mto vyhlasuje, e UBIQUITI NETWORKS device, sp a základné po iadavky a v etky príslu né ustanovenia Smernice 1999/5/ES.
Svenska [Swedish]	Härmed intygar UBIQUITI NETWORKS att denna UBIQUITI NETWORKS device, står I överensstämmelse med de väsentliga egenskapskrav och övriga relevanta bestämmelser som framgår av direktiv 1999/5/EG.
Español [Spanish]	Por medio de la presente UBIQUITI NETWORKS declara que el UBIQUITI NETWORKS device, cumple con los requisitos esenciales y cualesquiera otras disposiciones aplicables o exigibles de la Directiva 1999/5/CE.
Polski [Polish]	Niniejszym, firma UBIQUITI NETWORKS o wiadcza, e produkt serii UBIQUITI NETWORKS device, spełnia zasadnicze wymagania i inne istotne postanowienia Dyrektywy 1999/5/EC.
Português [Portuguese]	UBIQUITI NETWORKS declara que este UBIQUITI NETWORKS device, está conforme com os requisitos essenciais e outras disposições da Directiva 1999/5/CE.
Română [Romanian]	Prin prezenta, UBIQUITI NETWORKS declară că acest dispozitiv UBIQUITI NETWORKS este în conformitate cu cerințele esențiale și alte prevederi relevante ale Directivei 1999/5/CE.

JL121712

Support	**support.ubnt.com**
Wiki Page	**wiki.ubnt.com**
Support Forum	**forum.ubnt.com**
Downloads	**downloads.ubnt.com**

UBiQUiTi™ NETWORKS

www.ubnt.com

© 2012 Ubiquiti Networks, Inc. All rights reserved.